Instruction Manual
Lift Table



HM200A HM500A HM750A
HM1000A HM300DA

Note: Owner/Operator must read and understand this instruction

Manual before using the low profile lift table

Lift Table HM Series

HM200A HM500A HM750A

HM1000A HM300DA

Operation and Service Manual

BEFORE OPERATING THE LIFT TABLE， READ THIS MANUAL CAREFULLY AND UNDERSTAND COMPLETELY. KEEP THIS MANUAL ON FILE FOR FUTURE REFERENCE. IF THIS IS LOST, PLEASE CONTACT YOUR LOCAL SUPPLIER FOR A NEW COPY. ALSO, IF THE WARNING/CAUTION DECAL ON THE UNIT IS LOST, PLEASE CONTACT YOUR LOCAL SUPPLIER FOR A NEW DECAL.

NOTE: On this manual, WARNING means the danger which can lead to death or serious injury. CAUTION means the danger which can lead to slight injury or property damage.

1. WARNING

1. DO NOT put foot or hand in scissors mechanism.
2. DO NOT allow other person to stand in front of or behind lift table when it is moving.
3. DO NOT move lift table when table is in raised position. Load could fall down.
4. DO NOT enter under table.
5. DO NOT overload lift table.
6. DO NOT put foot in front of rolling wheels. Injury could result.
7. WATCH difference and hardness of floor level when moving lift table. Load could fall down.
8. DO NOT use lift table on slope or inclined surface, lift table may become uncontrollable and create danger.
9. DO NOT lift people. People could fall down and suffer severe injury.

2. CAUTION

1. Read this operation manual carefully and understand completely operating lift table. Improper operation could create danger.
2. This lift table is a movable lifter designed to lift or lower rated load on table. NO NOT use lift table for other purpose than its intended use.
3. DO NOT allow person to operate lift table who does not understand its operation.
4. DO NOT lower table too fast. Load could fall down and create danger.
5. KEEP watching the condition of load. Stop operating lift table if load becomes unstable.
6. Brake lift table when sliding load on or off table.
7. DO NOT side or end load. Load must be distributed on at least 80%of table area.
8. DO NOT use lift table with unstable, unbalanced loosely stacked load.
9. Practice maintenance work according to service instructions.
10. DO NOT modify lift table without manufacturers written consent.
11. REMOVE load from table and use safety stopper to prevent table from lowering when servicing lift table.
12. This lift table is not designed to be water resistant. Use lift table under dry condition.

3. DAILY INSPECTION

Daily inspection is effective to find the malfunction or fault on lift table. Check lift table on the following points before operation.

CAUTION
DO NOT use lift table if any malfunction or fault is found.

(1) Check for scratch, bending or cracking on the lift table.

(2) Check if there is any oil leakage from the cylinder.

(3) Check the vertical creep of the table.

(4) Check the smooth movement of the wheel.

(5) Check the function of brake.

(6) Check if all the bolt and nuts are tightened firmly.

4. OPERATING LIFTTABLE

4-1 Lifting the table

WARNING
1. DO NOT overload lift table, stay within its rated capacity. 2. DO NOT side end load must be distributed on at least 80% of table area.

Press the lifting pedal several times until the table reaches the desired position.

The table does not elevate after reaching the highest position even if the lifting pedal is pressed.

The table lowers slightly after reaching the highest position.

NOTE: The hydraulic cylinder is designed to hold table. As is the nature of the hydraulic system, table lowers very slowly over and extended period of time, Please note the table does not stay at the same position ionindefiinitely.

4-2. Lowering table

WARNING
DO NOT put foot or hand in scissors mechanism.

5. Specifications

Model		BH20	BH50	BH75	BH100	BH30D
Type	Unit	Single scissor	Single scissor	Single scissor	Single scissor	Double scissor
Rated capacity	kg	200	500	750	1000	300
Min.height	mm	270	435	435	445	435
Max.height	mm	750	1000	1000	980	1600
Platform size	mm	700x520	1010*520	1010x520	1010x520	1010x520
)Load wheel diameter(PU)	mm	Ø100	Ø150	Ø150	Ø150	Ø150
Steening wmeel diameter	mm	Ø100	Ø150	Ø150	Ø150	Ø150
Net weight	kg	54	112	116	130	131

6. Service instruction

7.1-1. Lubricate each point described below every month:

7.2. Change hydraulic oil every 12 months.

Lubricating Points

(1) Fitting of cylinder……Oil

(2) Roller friction surface……Grease

(3) Link Pin ……Oil

(4) Pedal fitting point……Oil

(5) Link center pin……Oil

(6) Joint……Grease

(7) Grease nipple……Grease

(8) Hydraulic circuit

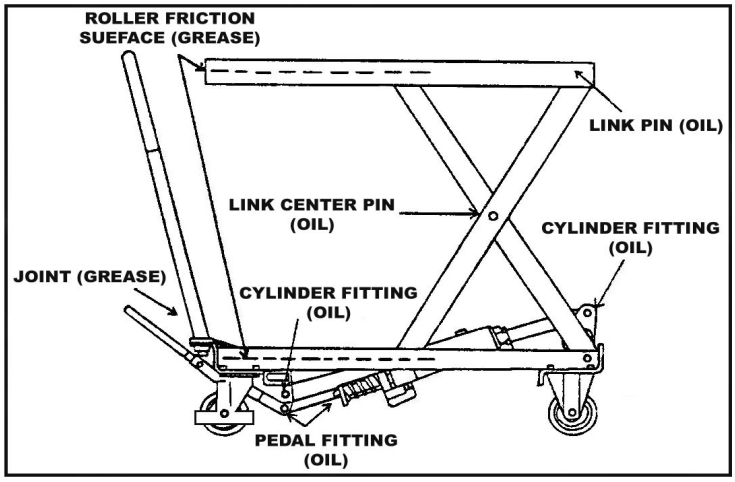

7. Hydraulic Circuit

